As of March 21, 2024

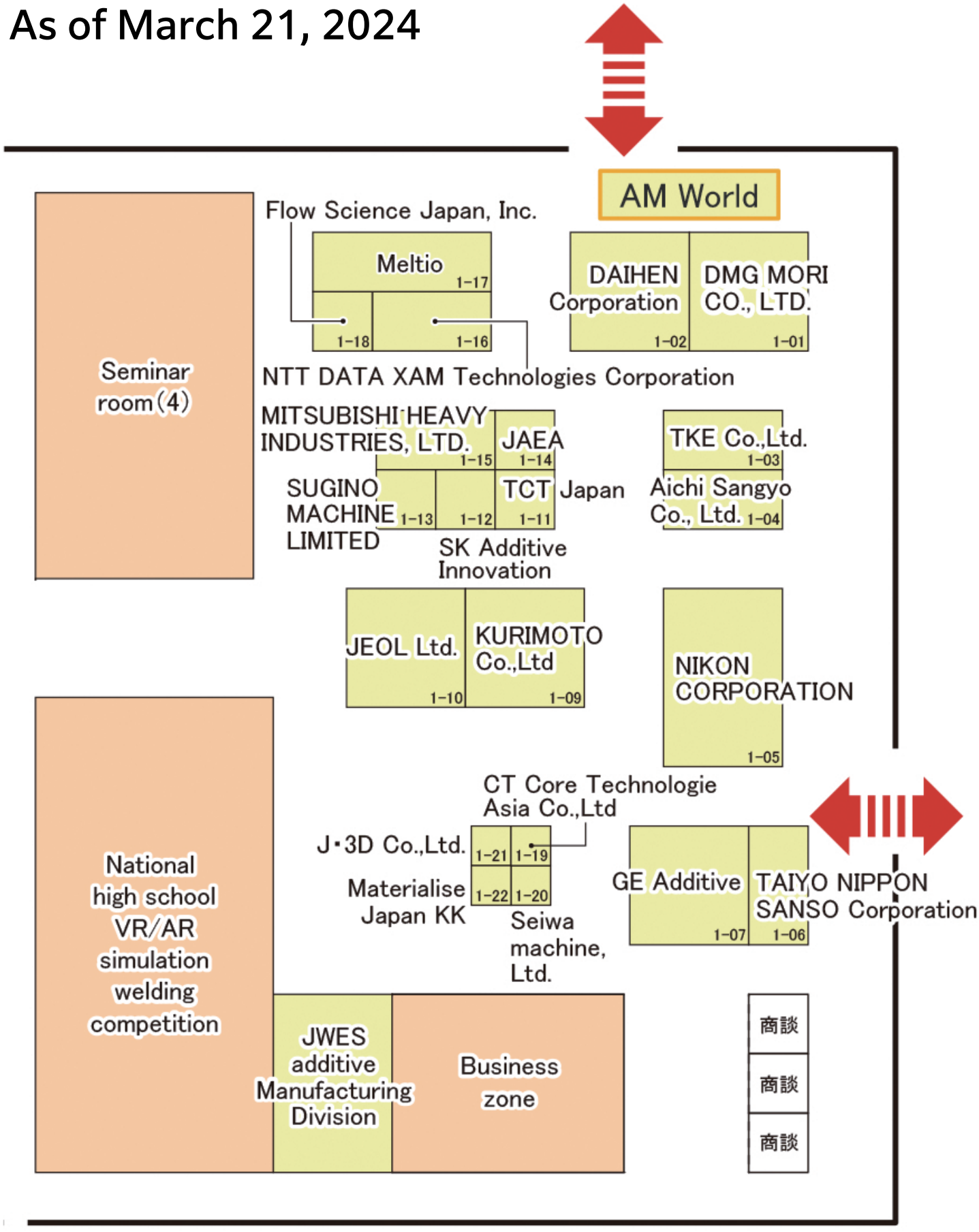

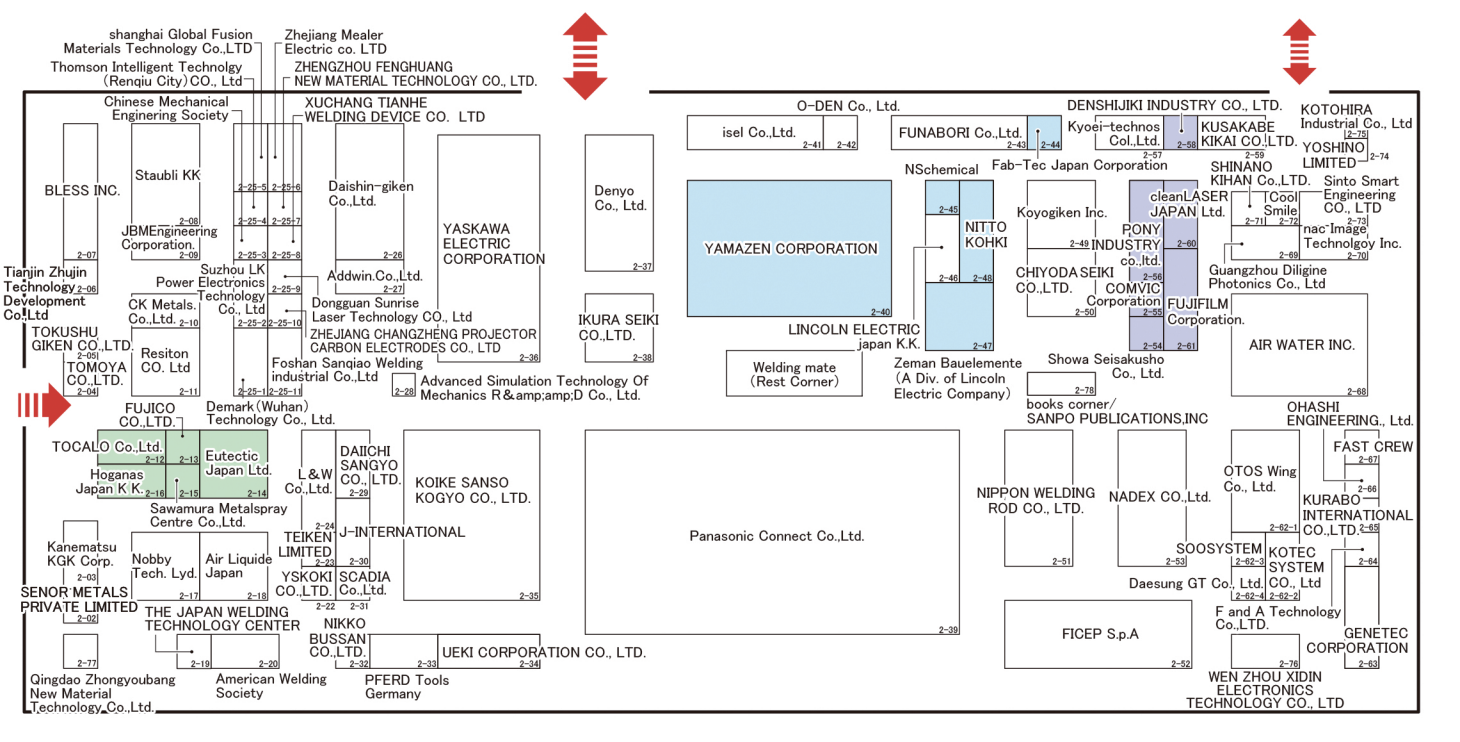
shanghai Global Fusion Materials Technology Co.,LTD
Zhejiang Mealer Electric co. LTD
Thomson Intelligent Technolgy (Renqiu City) CO., Ltd
ZHENGZHOU FENGHUANG NEW MATERIAL TECHNOLOGY CO., LTD.
Chinese Mechanical Enginering Society
XUCHANG TIANHE WELDING DEVICE CO. LTD
BLESS INC.
2-07
Staubli KK
2-08
JBMEngineering Corporation.
2-09
2-25-5
2-25-6
2-25-4
2-25-7
2-25-3
2-25-8
Daishin-giken Co.,Ltd.
2-26
YASKAWA ELECTRIC CORPORATION
2-36
Denyo Co., Ltd.
2-37
IKURA SEIKI CO.,LTD.
2-38
Tianjin Zhujin Technology Development Co.Ltd
2-06
Suzhou LK Power Electronics Technology Co., Ltd
2-25-9
2-25-12
2-25-10
2-25-11
Addwin.Co.,Ltd.
2-27
Dongguan Sunrise Laser Technology CO., Ltd
ZHEJIANG CHANGZHENG PROJECTOR CARBON ELECTRODES CO., LTD
CK Metals. Co.,Ltd.
2-10
TOKUSHU GIKEN CO.,LTD.
2-05
TOMOYA CO.,LTD.
2-04
Resiton CO. Ltd
2-11
Foshan Sanqiao Welding industrial Co.,Ltd
2-28
Advanced Simulation Technology Of Mechanics R&D Co., Ltd.
FUJICO CO.,LTD.
Demark (Wuhan) Technology Co., Ltd.
TOCALO Co.,Ltd.
2-12
2-13
Eutectic Japan Ltd.
2-14
Hoganas Japan K.K.
2-16
2-15
Sawamura Metalspray Centre Co.,Ltd.
L&W Co.,Ltd.
2-24
DAIICHI SANGYO CO., LTD.
2-29
KOIKE SANSO KOGYO CO., LTD.
2-35
Kanematsu KGK Corp.
2-03
Nobby Tech. Lyd.
2-17
Air Liquide Japan
2-18
TEIKEN LIMITED
2-23
J-INTERNATIONAL
2-30
SENOR METALS PRIVATE LIMITED
2-02
YSKOKI CO.,LTD.
2-22
SCADIA Co.,Ltd.
2-31
THE JAPAN WELDING TECHNOLOGY CENTER
2-19
2-20
NIKKO BUSSAN CO.,LTD.
2-32
2-33
UEKI CORPORATION CO., LTD.
2-34
2-77
Qingdao Zhongyoubang New Material Technology Co.,Ltd.
American Welding Society
PFERD Tools Germany
Panasonic Connect Co.,Ltd.
2-39
O-DEN Co., Ltd.
isel Co.,Ltd.
2-41
2-42
FUNABORI Co.,Ltd.
2-43
2-44
DENSHIJIKI INDUSTRY CO., LTD.
Kyoei-technos Col.,Ltd.
2-57
KUSAKABE KIKAI CO.,LTD.
2-58
2-59
KOTOHIRA Industrial Co., Ltd
2-75
YOSHINO LIMITED
2-74
YAMAZEN CORPORATION
2-40
NSchemical
2-45
2-46
NITTO KOHKI
2-48
2-47
Fab-Tec Japan Corporation
Koyogiken Inc.
2-49
CHIYODA SEIKI CO.,LTD.
2-50
PONY INDUSTRY co.,ltd.
2-56
COMVIC Corporation
2-55
cleanLASER JAPAN Ltd.
2-60
2-54
2-61
FUJIFILM Corporation.
SHINANO KIHAN Co.,LTD.
2-71
Cool Smile
2-72
2-69
Sinto Smart Engineering CO., LTD
2-73
nac Image Technolgoy Inc.
2-70
Guangzhou Diligine Photonics Co., Ltd
AIR WATER INC.
2-68
LINCOLN ELECTRIC japan K.K.
Welding mate (Rest Corner)
Zeman Bauelemente (A Div. of Lincoln Electric Company)
Showa Seisakusho Co., Ltd.
2-78
books corner/ SANPO PUBLICATIONS,INC
OHASHI ENGINEERING., Ltd.
FAST CREW
2-67
2-66
NIPPON WELDING ROD CO., LTD.
2-51
NADEX CO.,Ltd.
2-53
OTOS Wing Co., Ltd.
2-62-1
KURABO INTERNATIONAL CO.,LTD
2-65
SOOSYSTEM
2-62-3
KOTEC SYSTEM CO., Ltd
2-64
Daesung GT Co., Ltd.
2-62-4
2-62-2
F and A Technology Co.,LTD.
2-76
GENETEC CORPORATION
2-63
FICEP S.p.A
2-52
WEN ZHOU XIDIN ELECTRONICS TECHNOLOGY CO., LTD

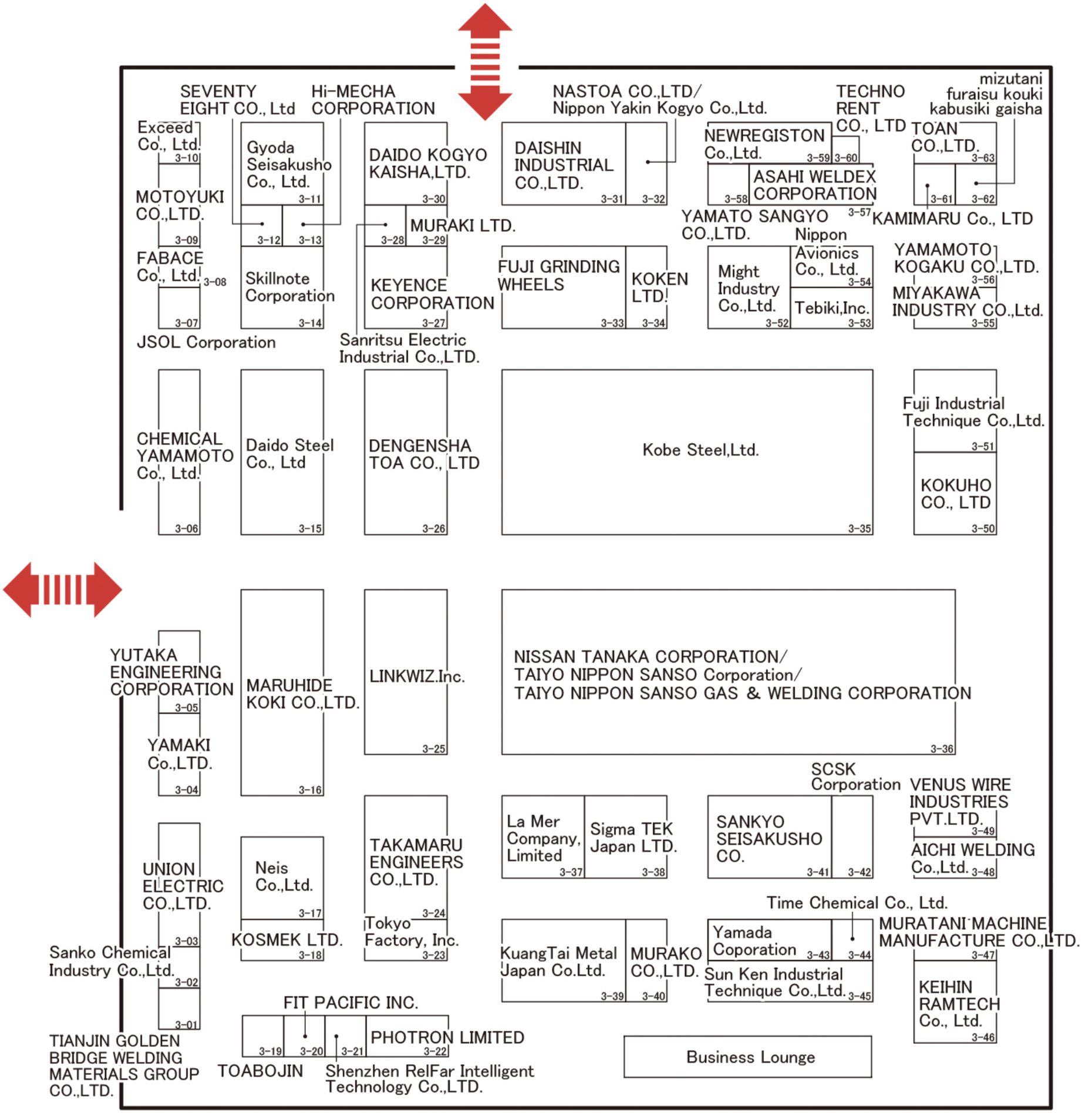
SEVENTY EIGHT CO., Ltd
Hi-MECHA CORPORATION
NASTOA CO.,LTD/ Nippon Yakin Kogyo Co.,Ltd.
TECHNO RENT CO., LTD
mizutani furaisu kouki kabusiki gaisha
Exceed Co., Ltd. 3-10
Gyoda Seisakusho Co., Ltd. 3-11
DAIDO KOGYO KAISHA,LTD. 3-30
DAISHIN INDUSTRIAL CO.,LTD. 3-31 3-32
NEWREGISTON Co.,Ltd. 3-59 3-60
TOAN CO.,LTD. 3-63
ASAHI WELDEX CORPORATION 3-58 3-57
MOTOYUKI CO.,LTD. 3-09
3-12 3-13
3-28 3-29
MURAKI LTD.
YAMATO SANGYO CO.,LTD.
3-61 3-62
KAMIMARU Co., LTD
FABACE Co., Ltd. 3-08
Skillnote Corporation 3-14
KEYENCE CORPORATION 3-27
FUJI GRINDING WHEELS 3-33
KOKEN LTD. 3-34
Might Industry Co.,Ltd. 3-52
Nippon Avionics Co., Ltd. 3-54
Tebiki,Inc. 3-53
YAMAMOTO KOGAKU CO.,LTD. 3-56
MIYAKAWA INDUSTRY CO.,Ltd. 3-55
3-07
JSOL Corporation
Sanritsu Electric Industrial Co.,LTD.
CHEMICAL YAMAMOTO Co., Ltd. 3-06
Daido Steel Co., Ltd 3-15
DENGENSHA TOA CO., LTD 3-26
Kobe Steel,Ltd. 3-35
Fuji Industrial Technique Co.,Ltd. 3-51
KOKUHO CO., LTD 3-50
YUTAKA ENGINEERING CORPORATION 3-05
MARUHIDE KOKI CO.,LTD. 3-16
LINKWIZ.Inc. 3-25
NISSAN TANAKA CORPORATION/ TAIYO NIPPON SANSO Corporation/ TAIYO NIPPON SANSO GAS & WELDING CORPORATION 3-36
YAMAKI Co.,LTD. 3-04
SCSK Corporation
VENUS WIRE INDUSTRIES PVT.LTD. 3-49
UNION ELECTRIC CO.,LTD. 3-03
Neis Co.,Ltd. 3-17
TAKAMARU ENGINEERS CO.,LTD. 3-24
La Mer Company, Limited 3-37
Sigma TEK Japan LTD. 3-38
SANKYO SEISAKUSHO CO. 3-41 3-42
AICHI WELDING Co.,Ltd. 3-48
Time Chemical Co., Ltd.
MURATANI MACHINE MANUFACTURE CO.,LTD. 3-47
Sanko Chemical Industry Co.,Ltd. 3-02
KOSMEK LTD. 3-18
Tokyo Factory, Inc. 3-23
KuangTai Metal Japan Co.Ltd. 3-39
MURAKO CO.,LTD. 3-40
Yamada Coporation 3-43 3-44
Sun Ken Industrial Technique Co.,Ltd. 3-45
KEIHIN RAMTECH Co., Ltd. 3-46
3-01
FIT PACIFIC INC.
3-19 3-20 3-21 3-22
PHOTRON LIMITED
TIANJIN GOLDEN BRIDGE WELDING MATERIALS GROUP CO.,LTD.
TOABOJIN
Shenzhen RelFar Intelligent Technology Co.,LTD.
Business Lounge

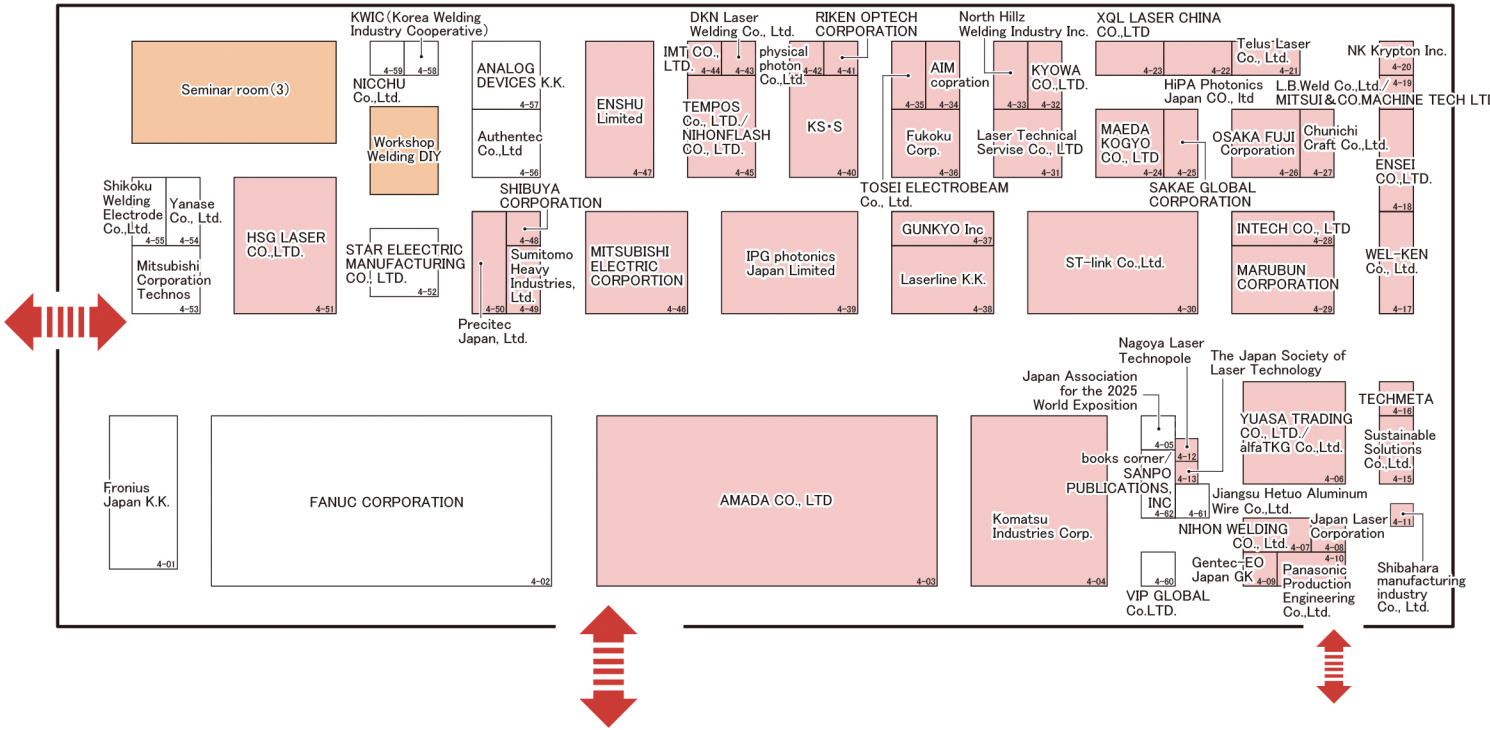
Seminar room (3)
KWIC (Korea Welding Industry Cooperative)
4-59
4-58
NICCHU Co.,Ltd.
Workshop Welding DIY
ANALOG DEVICES K.K.
4-57
Authentec Co.,Ltd
4-56
ENSHU Limited
4-47
IMT CO., LTD.
4-44
4-43
DKN Laser Welding Co., Ltd.
TEMPOS Co., LTD./ NIHONFLASH CO., LTD.
4-45
physical photon Co.,Ltd.
4-42
4-41
RIKEN OPTECH CORPORATION
KS・S
4-40
AIM copration
4-35
4-34
Fukoku Corp.
4-36
TOSEI ELECTROBEAM Co., Ltd.
North Hillz Welding Industry Inc.
4-33
4-32
KYOWA CO.,LTD.
Laser Technical Servise Co., LTD
4-31
XQL LASER CHINA CO.,LTD
4-23
4-22
Telus Laser Co., Ltd.
4-21
HiPA Photonics Japan CO., ltd
MAEDA KOGYO CO., LTD
4-24
4-25
NK Krypton Inc.
4-20
L.B.Weld Co.,Ltd./ MITSUI&CO.MACHINE TECH LTD
4-19
OSAKA FUJI Corporation
4-26
Chunichi Craft Co.,Ltd.
4-27
ENSEI CO.,LTD.
4-18
SAKAE GLOBAL CORPORATION
Shikoku Welding Electrode Co.,Ltd.
4-55
Yanase Co., Ltd.
4-54
Mitsubishi Corporation Technos
4-53
HSG LASER CO.,LTD.
4-51
STAR ELEECTRIC MANUFACTURING CO.! LTD.
4-52
SHIBUYA CORPORATION
4-48
Sumitomo Heavy Industries, Ltd.
4-49
4-50
Precitec Japan, Ltd.
MITSUBISHI ELECTRIC CORPORTION
4-46
IPG photonics Japan Limited
4-39
GUNKYO Inc
4-37
Laserline K.K.
4-38
ST-link Co.,Ltd.
4-30
INTECH CO., LTD
4-28
MARUBUN CORPORATION
4-29
WEL-KEN Co., Ltd.
4-17
Nagoya Laser Technopole
Japan Association for the 2025 World Exposition
The Japan Society of Laser Technology
4-05
4-12
4-13
books corner/ SANPO PUBLICATIONS, INC
4-62
4-61
YUASA TRADING CO., LTD./ alfaTKG Co.,Ltd.
4-06
TECHMETA
4-16
Sustainable Solutions Co.,Ltd.
4-15
Jiangsu Hetuo Aluminum Wire Co.,Ltd.
NIHON WELDING CO., Ltd.
4-07
4-08
4-10
Japan Laser Corporation
4-11
Gentec-EO Japan GK
4-09
Panasonic Production Engineering Co.,Ltd.
4-60
VIP GLOBAL Co.LTD.
Shibahara manufacturing industry Co., Ltd.
Fronius Japan K.K.
4-01
FANUC CORPORATION
4-02
AMADA CO., LTD
4-03
Komatsu Industries Corp.
4-04

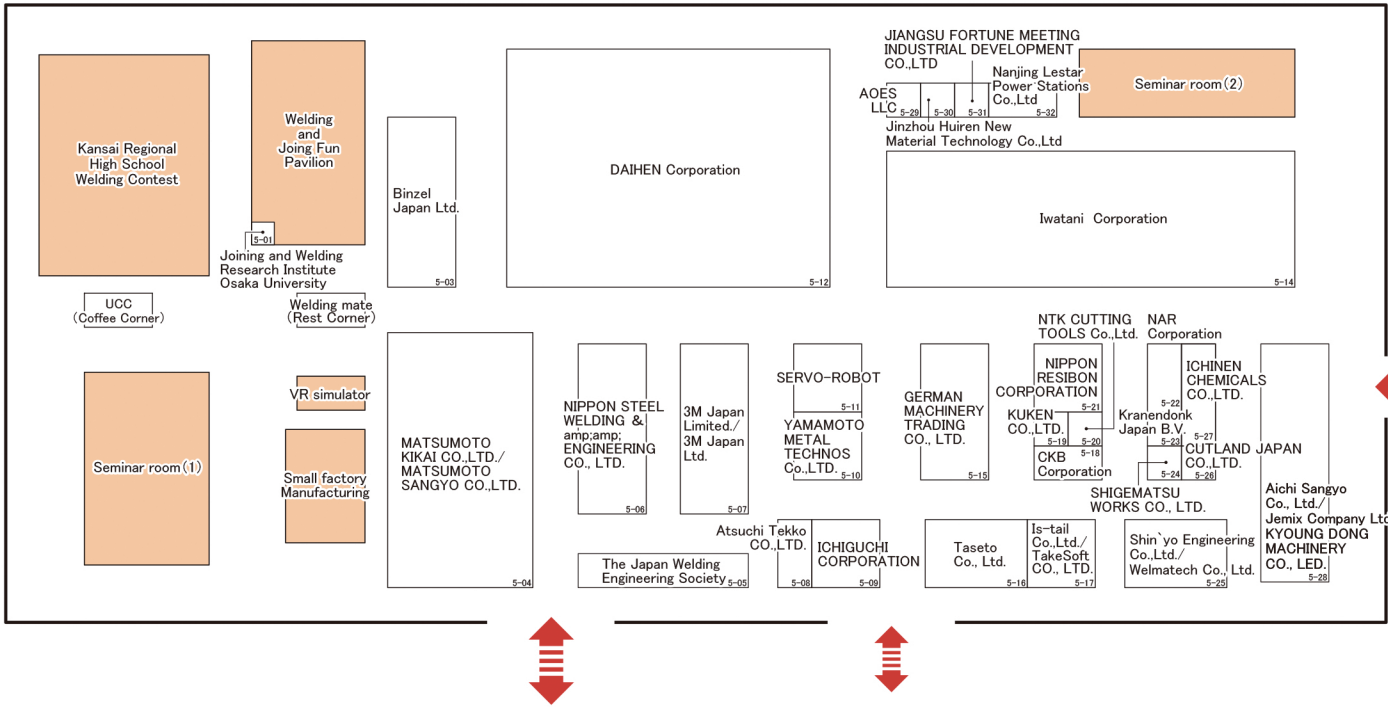
Kansai Regional High School Welding Contest
Welding and Joing Fun Pavilion
5-01
Joining and Welding Research Institute Osaka University
Binzel Japan Ltd.
5-03
DAIHEN Corporation
5-12
JIANGSU FORTUNE MEETING INDUSTRIAL DEVELOPMENT CO.,LTD
AOES LLC
5-29
5-30
5-31
Nanjing Lestar Power Stations Co.,Ltd
5-32
Jinzhou Huiren New Material Technology Co.,Ltd
Seminar room (2)
Iwatani Corporation
5-14
UCC (Coffee Corner)
Welding mate (Rest Corner)
Seminar room (1)
VR simulator
Small factory Manufacturing
MATSUMOTO KIKAI CO.,LTD./ MATSUMOTO SANGYO CO.,LTD.
5-04
NIPPON STEEL WELDING & amp;amp; ENGINEERING CO., LTD.
5-06
3M Japan Limited./ 3M Japan Ltd.
5-07
SERVO-ROBOT
5-11
YAMAMOTO METAL TECHNOS Co.,LTD.
5-10
GERMAN MACHINERY TRADING CO., LTD.
5-15
NTK CUTTING TOOLS Co.,Ltd.
NIPPON RESIBON CORPORATION
5-21
KUKEN CO.,LTD.
5-19
5-20
5-18
CKB Corporation
Kranendonk Japan B.V.
5-23
NAR Corporation
5-22
ICHINEN CHEMICALS CO.,LTD.
5-27
CUTLAND JAPAN CO.,LTD.
5-24
5-26
SHIGEMATSU WORKS CO., LTD.
Aichi Sangyo Co., Ltd./ Jemix Company Ltd./ KYOUNG DONG MACHINERY CO., LED.
5-28
Atsuchi Tekko CO.,LTD.
5-08
ICHIGUCHI CORPORATION
5-09
The Japan Welding Engineering Society
5-05
Taseto Co., Ltd.
5-16
Is-tail Co.,Ltd./ TakeSoft CO., LTD.
5-17
Shin`yo Engineering Co.,Ltd./ Welmatech Co., Ltd.
5-25